REVISIONS				
ZONE	REV	DESCRIPTION	DATE	APPROVED

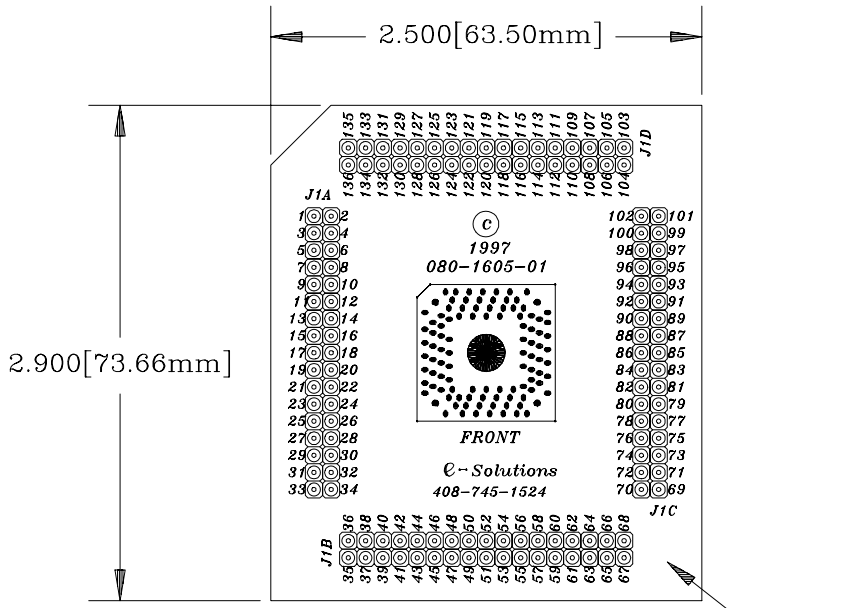

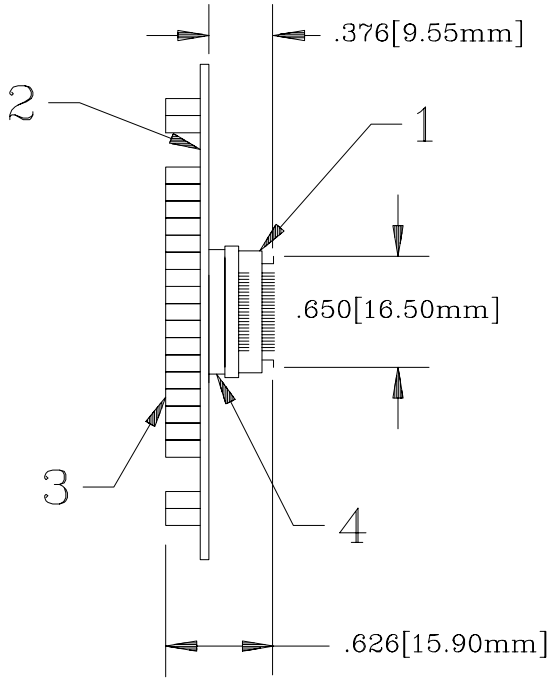

NO.	PART NUMBER	DESCRIPTION	QTY.
1	000-4572	BASE-TQ-100Q5-SMT	1
2	280-1488	TOP-SUB-EMAD-NOHAU-C296SB-TQ-100Q5	1
3	000-1536-00	HEADR-WWP-F-1-025-(.023X.118)-1X36	3
4	000-2945	RECEP-TQ-100Q5-3mmGP-FSTNR	1
5	080-1605-01	PCB-NOHAU-296SB-100Q5	1

www.adapters.com
TEL:(408)745-1524
FAX:(408)745-1526
422 Ives Terrace
Sunnyvale, CA 94087

Emulation Solutions
An Embedded Systems Solutions Company

DESCRIPTION: EMAD-NOHAU-C296SB-TQ-100Q5

SIZE	DATE:	PART NO.	REV
A	10-22-97	180-1488-00	

SCALE	CHECKED:	DRAWN BY:	SHEET
1:1	Gabor Kardos	Scott Barcellos	