REVISIONS				
ZONE	REV	DESCRIPTION	DATE	APPROVED

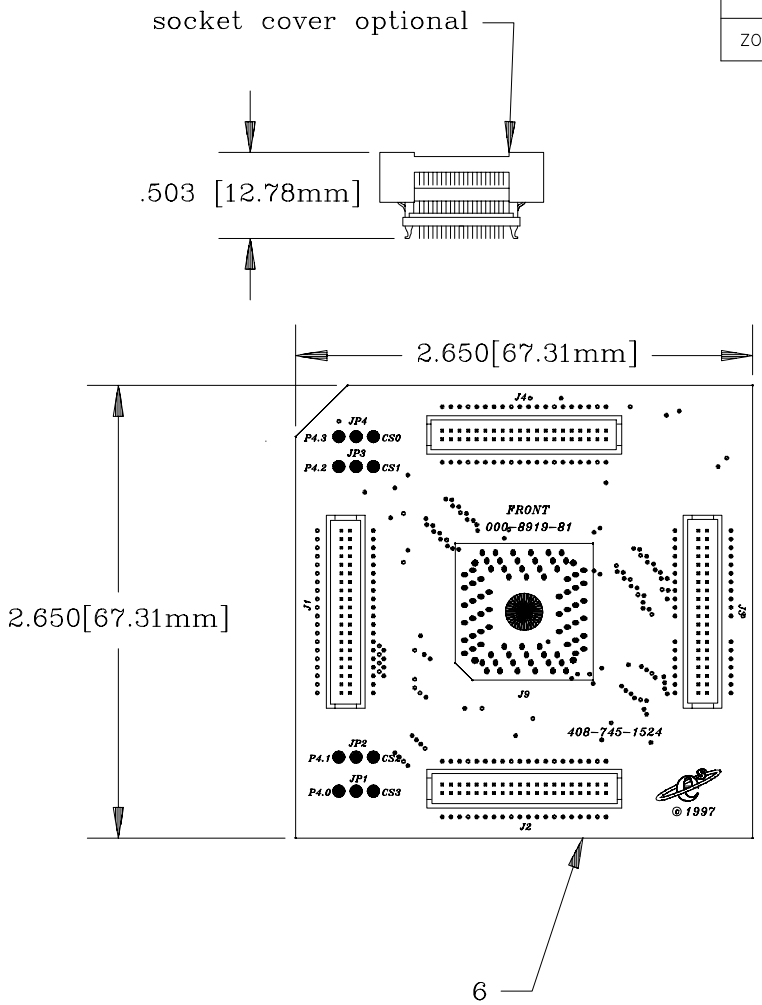

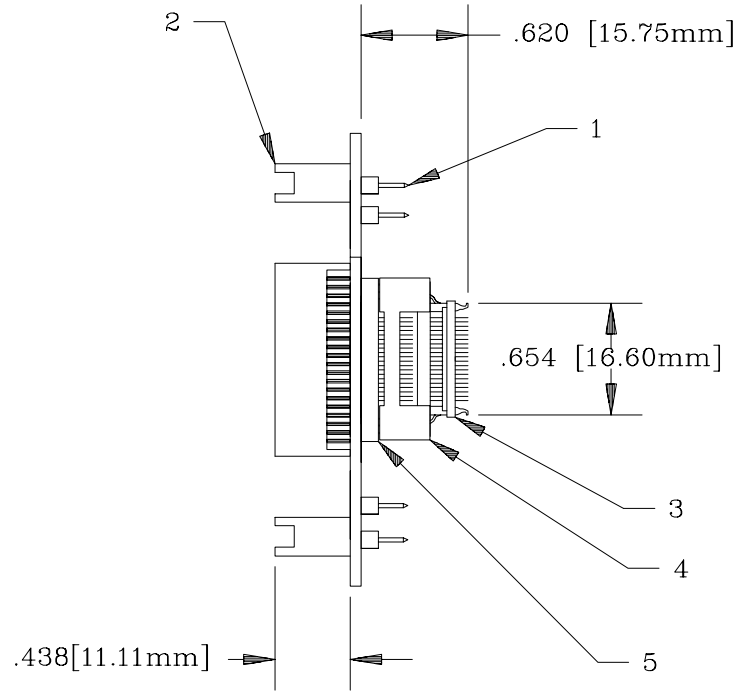

NO.	PART NUMBER	DESCRIPTION	QTY.
1	000-1502	HEADR-WWP-M-1-025-230-100-1X36	1
2	000-1620-20	HEADR-BOX-SMT-M-5-2X20-LOCKING	4
3	000-2177-00	BASE-NQ-080Q65-SMT	1
4	000-2179-00	BASE-YQ-080Q65-EM-CVR	1
5	000-2869	RECEP-TQ-080Q65-3mmGP-FSTNR	1
6	000-8919-81	PCB-NOHAU-080Q65-C164C1-NQ/TQ	1

www.adapters.com
TEL:(408)745-1524
FAX:(408)745-1526
422 Ives Terrace
Sunnyvale, CA 94087

Emulation Solutions

An Embedded Systems Solutions Company

DESCRIPTION: EMADSMT-NOHAU-080Q65-C164C1-NQ

SIZE	DATE:	PART NO.	REV
A	10-22-98	180-5550-20	
SCALE 1:1	CHECKED: Gabor Kardos	DRAWN BY: Scott Barcellos	SHEET